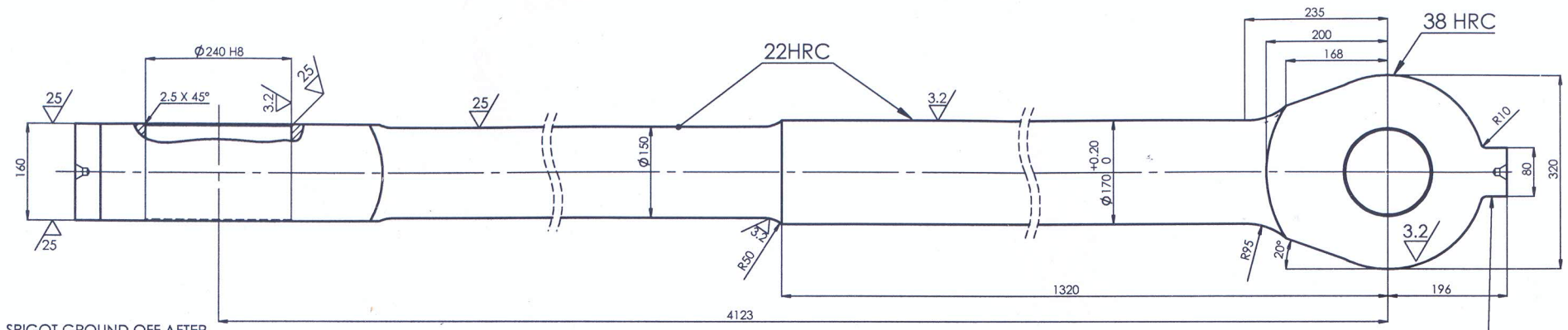

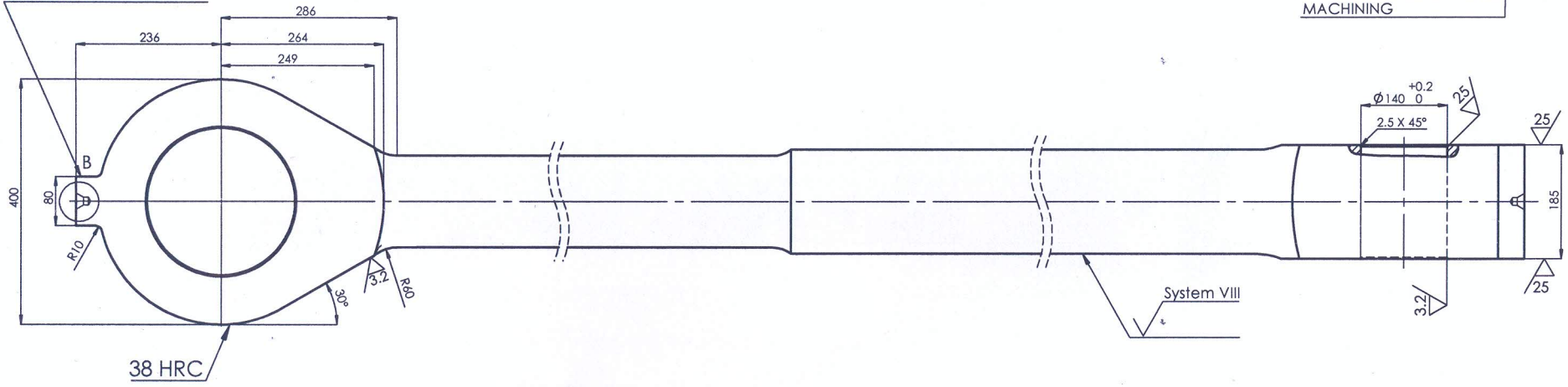

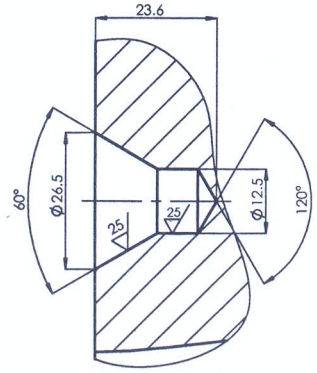

DETAIL B
SCALE 1 : 1

شرکت بین المللی ساروج بوشهر
دفتر فنی
تاریخ : ۱۴۰۰/۰۴/۱۵
کارخانه سیمان کنگان

FORGED AND HEAT TREATED TO A MINIMUM YIELD POINT OF 570 N/MM2

roh (3.2 / 25)

mm	mm
240H8	+0.07 0

UNLESS OTHERWISE SPECIFIED:
DIMENSIONS ARE IN MILLIMETERS
Surface finish: Iso 1302
General tolerances: Iso 2768-mk
For rough castings: Iso 8062/CT9
For welded conctruction :Iso 13920

Sarooj Bushehr CO

DEBUR AND BREAK SHARP EDGES

	NAME	SIGNATURE	DATE
DRAWN	A.Shayanmehr		93.11.19
CHK'D	M.Cheraghian		
APPV'D	H.Aliyon		1400,04,15
Q.A			

Material: Steel EN 102503-42CrMo04(1.7225)-QT

Weight: 790 Kg

DO NOT SCALE DRAWING | REVISION:4 | Date Rev 1400.04.15

Ref No : 20006443

TITLE:
Tie Rod DIN7527 Ø170/150x4123
Dep. 060 0506

DWG NO. 3000-01-000109

A3

Unit:mm

SCALE:1:5

SHEET 1 OF 1